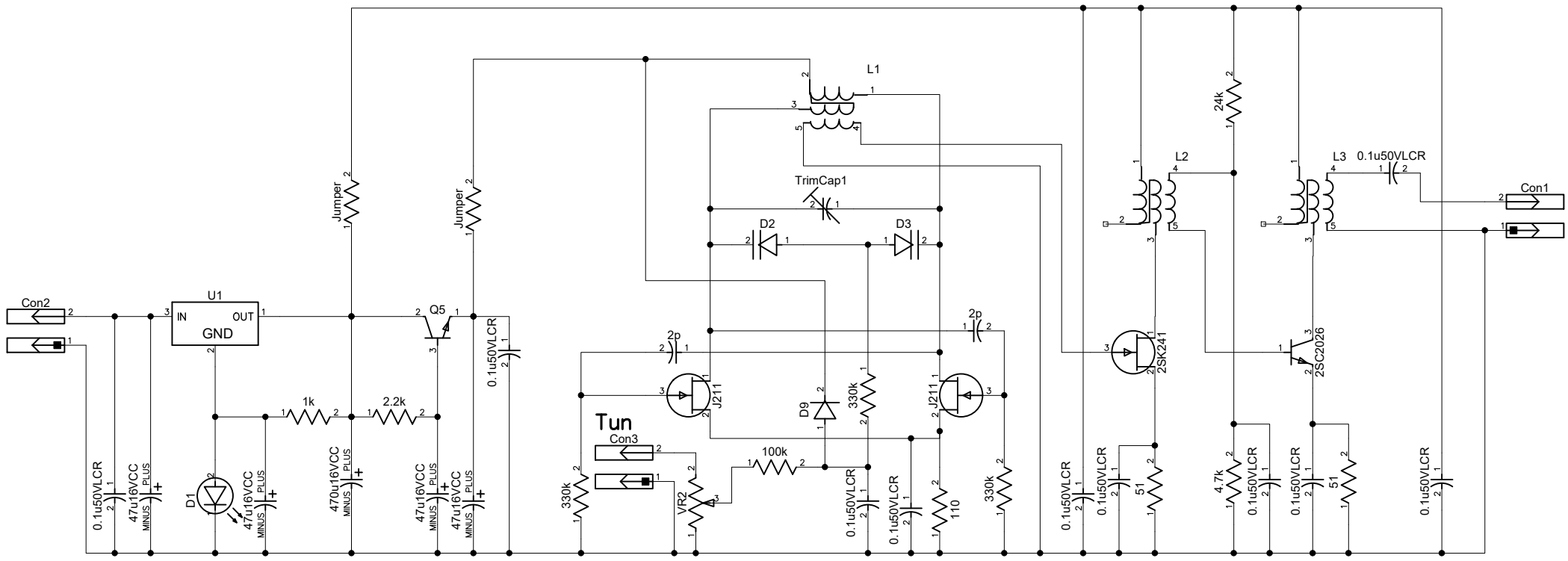
Con2
U1
IN
OUT
GND
Q5
Jumper
Jumper
1k
2.2k
D1
0.1u50VLCR
47u16VCC
MINUS
PLUS
470u16VCC
0.1u50VLCR
L1
TrimCap1
D2
D3
2p
2p
J211
J211
D9
330k
330k
100k
Tun
Con3
VR2
110
330k
L2
L3
0.1u50VLCR
24k
2SK241
2SC2026
51
4.7k
51
Con1