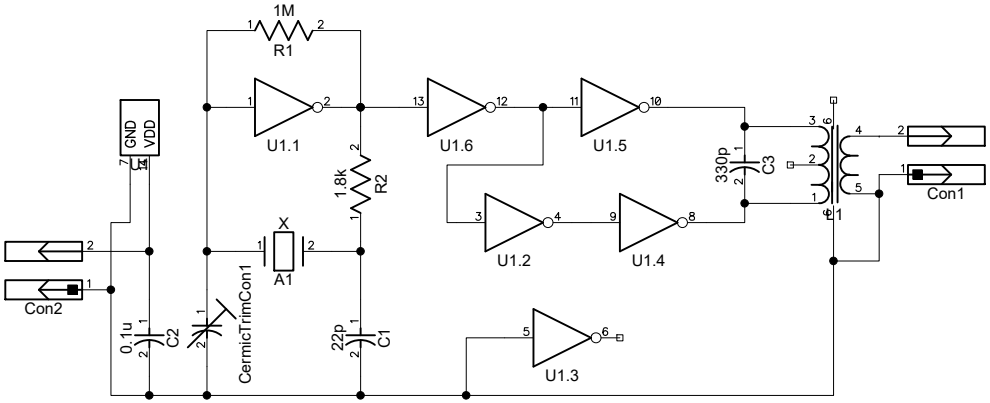
1M
R1
U1.1
U1.6
U1.5
GND
VDD
1.8k
R2
330p
C3
T1
Con1
X
A1
U1.2
U1.4
Con2
0.1u
C2
CermicTrimCon1
22p
C1
U1.3