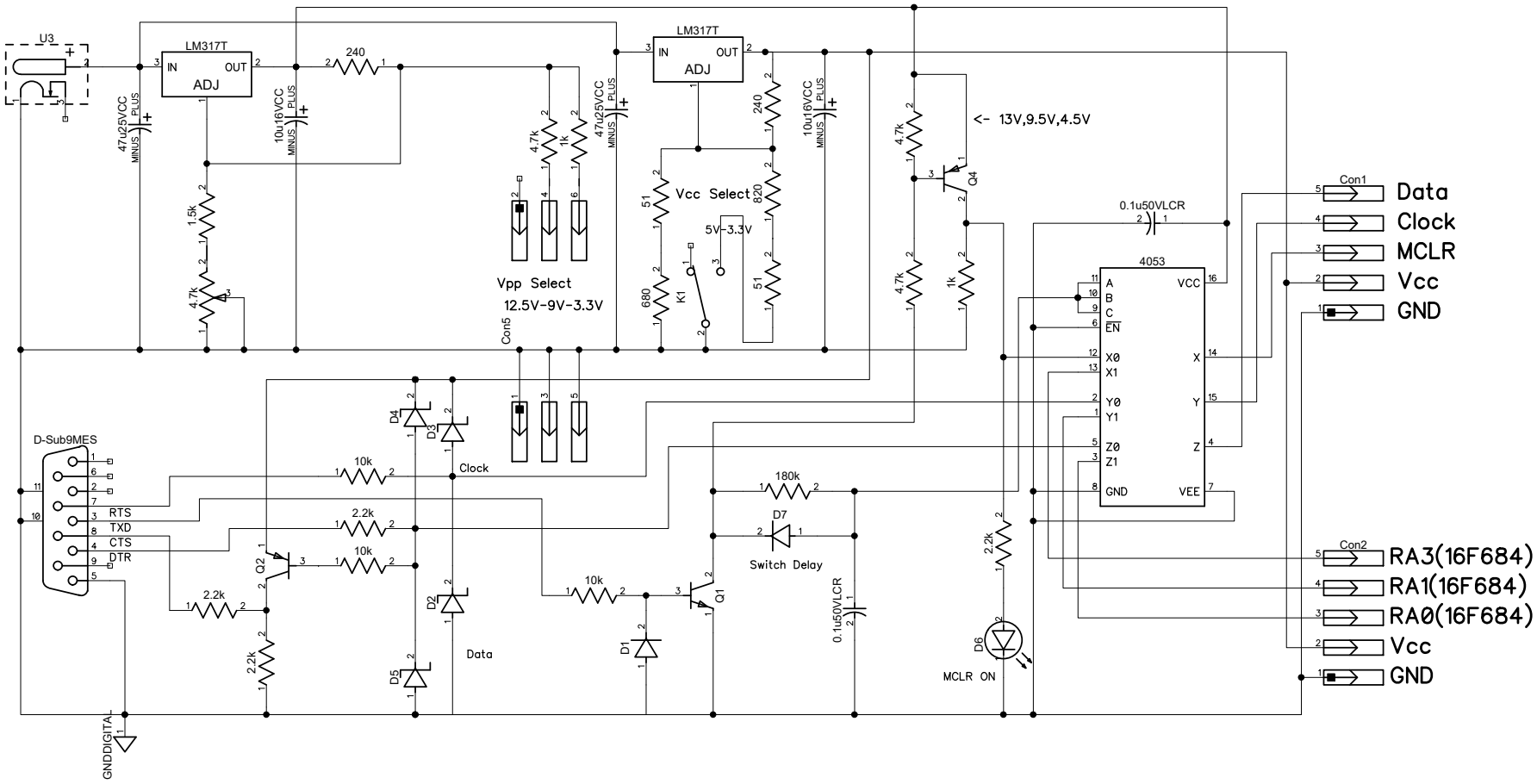
U3
LM317T
IN
OUT
ADJ
240
47u25VCC
PLUS
MINUS
10u16VCC
1.5k
4.7k
1k
Vpp Select
12.5V-9V-3.3V
Con5
Vcc Select
5V-3.3V
K1
51
680
820
<- 13V,9.5V,4.5V
Q4
0.1u50VLCR
4053
A
B
C
EN
X0
X1
Y0
Y1
Z0
Z1
GND
VCC
X
Y
Z
VEE
Con1
Data
Clock
MCLR
Vcc
GND
Con2
RA3(16F684)
RA1(16F684)
RA0(16F684)
D-Sub9MES
RTS
TXD
CTS
DTR
10k
2.2k
Q2
D4
D3
D2
D5
Clock
Data
180k
D7
Switch Delay
Q1
D1
0.1u50VLCR
D6
MCLR ON
GNDDIGITAL